Hifly CARGO

Airbus A340-300

9H-TQY

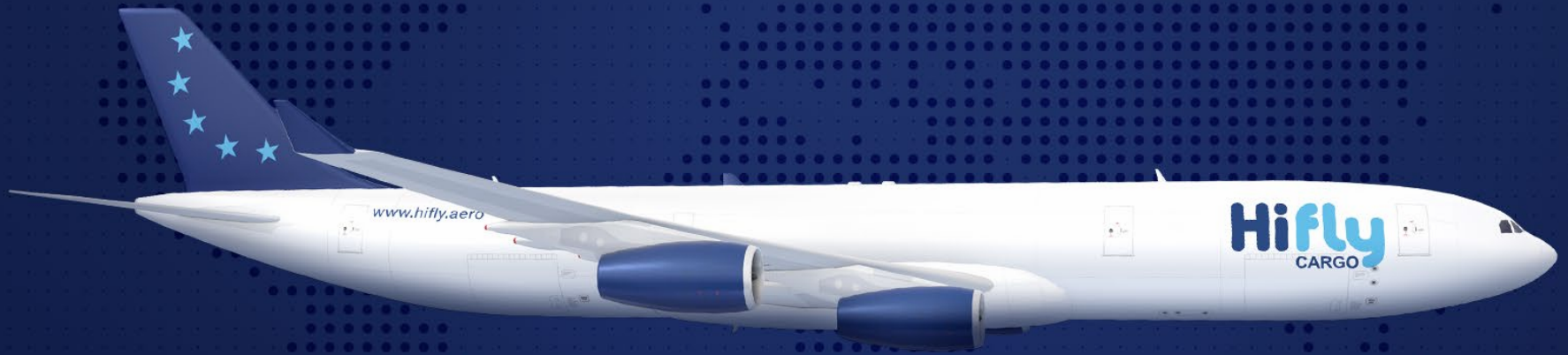

Max Range	Volume Capacity	Max Cargo Capacity
9.955 km	139 m³	44.800 kg

CARGO COMPARTMENT

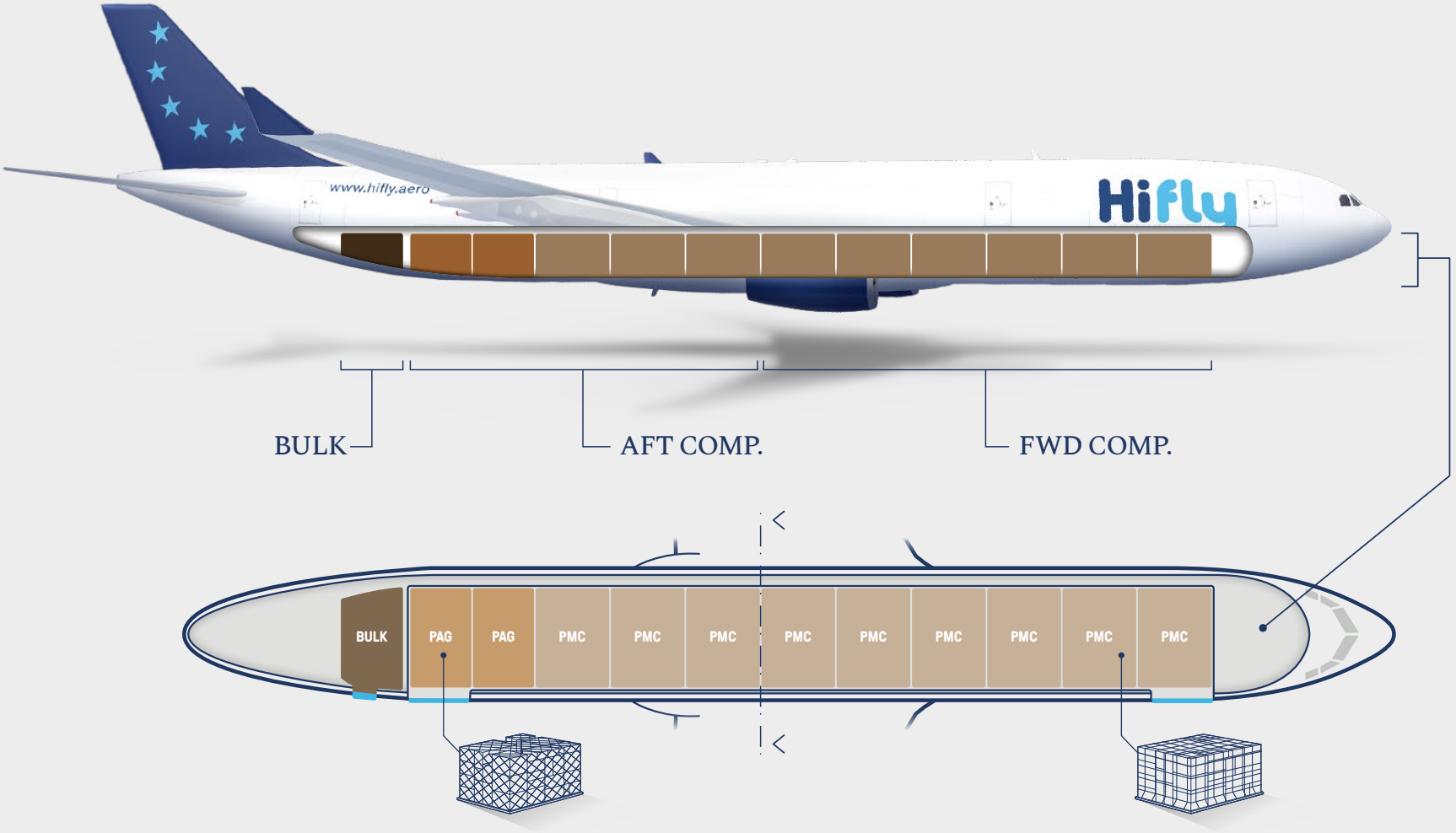

FWD COMP.	AFT COMP.	BULK	TOTAL CARGO
6 PMC (66 m³)	3 PMC + 2 PAG (53 m³)	20 m³	139 m³

DISCLAIMER

Furthermore, to support the aircraft maintenance and operation, on most flights the carrier might need to carry one FAK (FLY AWAY KIT) AKE container that contains spare parts, tools and consumables. This will further reduce the space available for cargo by 6.5 m³. The price quoted for your flight does not depend on the actual volume carried.

Hifly CARGO

CARGO COMPARTMENT

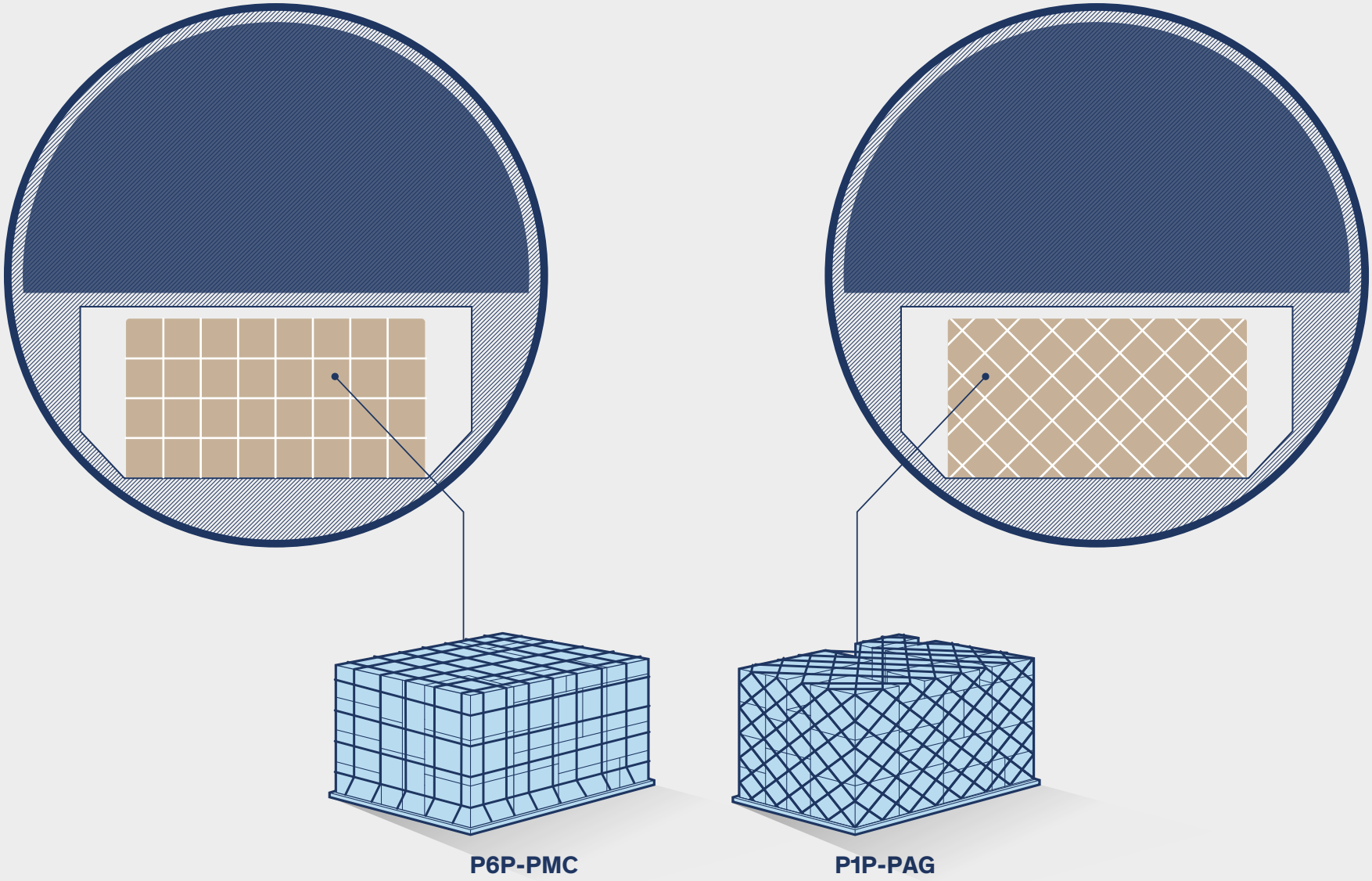

ULD - UNIT LOAD DEVICE

CONTAINER

AKE-LD3

Max Volume	4,5 m³
Max Weight	1.560 kg

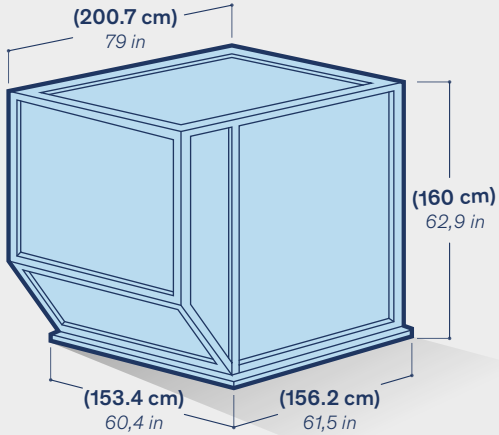

PALLETS

P6P-PMC

Max Volume	11 m³
Max Weight	5.100 kg

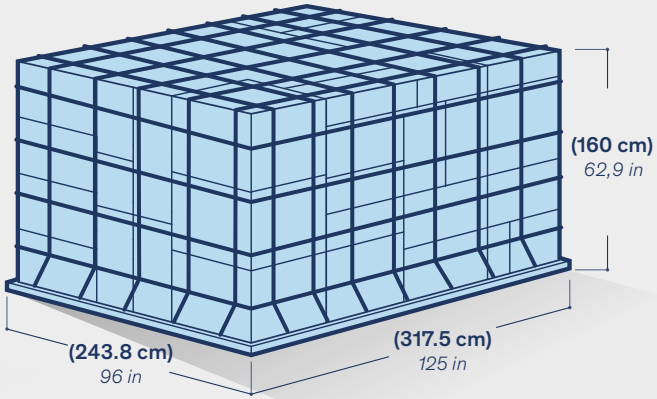

P1P-PAG

Max Volume	10 m³
Max Weight	4.636 kg

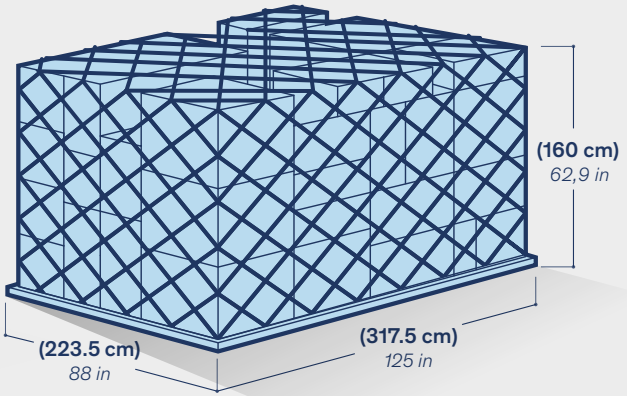

Hifly CARGO

FOR CARGO INQUIRES

+351 211 143 680
sales@hifly.aero

FOR URGENT REQUESTS OUTSIDE BUSINESS HOURS PLEASE CONTACT HI FLY OCC

+351 211 143 510
cco@hifly.aero

CARGO DEPARTMENT

cargo@hifly.aero

ADDRESS

Latino Coelho nr 1, Hi Fly Building
1050-132 Lisbon - Portugal